DISASSEMBLY

1. REMOVE BRAKE MASTER CYLINDER RESERVOIR SUB-ASSEMBLY

(a) Remove the stopper screw and reservoir sub-assembly.

(b) Remove the cap and strainer from the reservoir sub-assembly.

(c) Remove the 2 grommets from the master cylinder sub-assembly.

2. REMOVE BRAKE MASTER CYLINDER KIT

(a) Hold the master cylinder sub-assembly in a vise with the 2 aluminum plates in between.

(b) Remove the O-ring from the master cylinder sub-assembly.

(c) Push in the piston and remove the snap ring using snap ring pliers.
NOTICE:
When pushing in the piston, the fluid left in the cylinder may spatter.

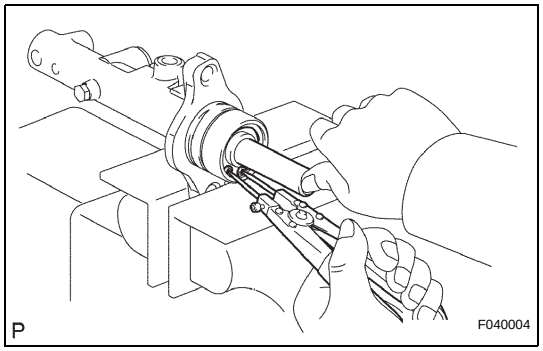

(d) without VSC:
Push in the piston and remove the piston stopper bolt and gasket.

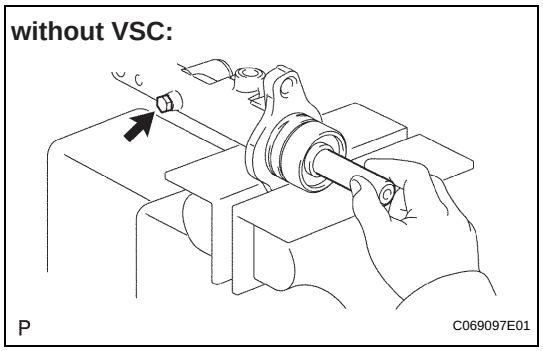

(e) with VSC:
Push in the piston and remove the straight pin by turning over the cylinder body.
NOTICE:
Use a shop rag to prevent damage.

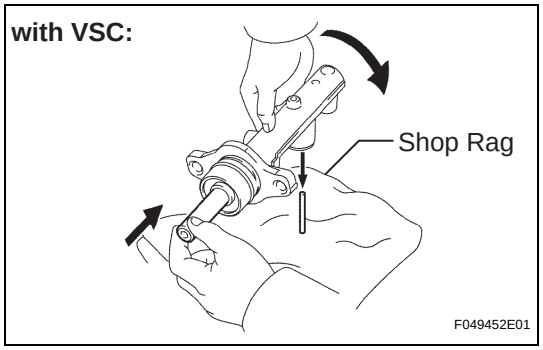

(f) Remove the No. 1 piston from the master cylinder body by pulling it straight out.
NOTICE:
Do not scratch the inside of the cylinder body.

cardiagn.com

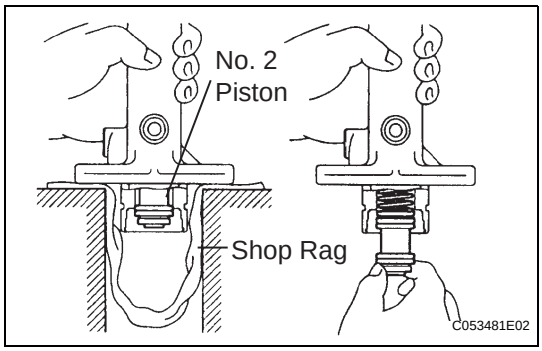

(g) Tap the flanged part against wooden blocks until the end of the No. 2 piston comes out. When the end of the No. 2 piston comes out, pull out the No. 2 piston straight from the master cylinder body.
NOTICE:
Do not scratch the inside of the cylinder body.

cardiagn.com